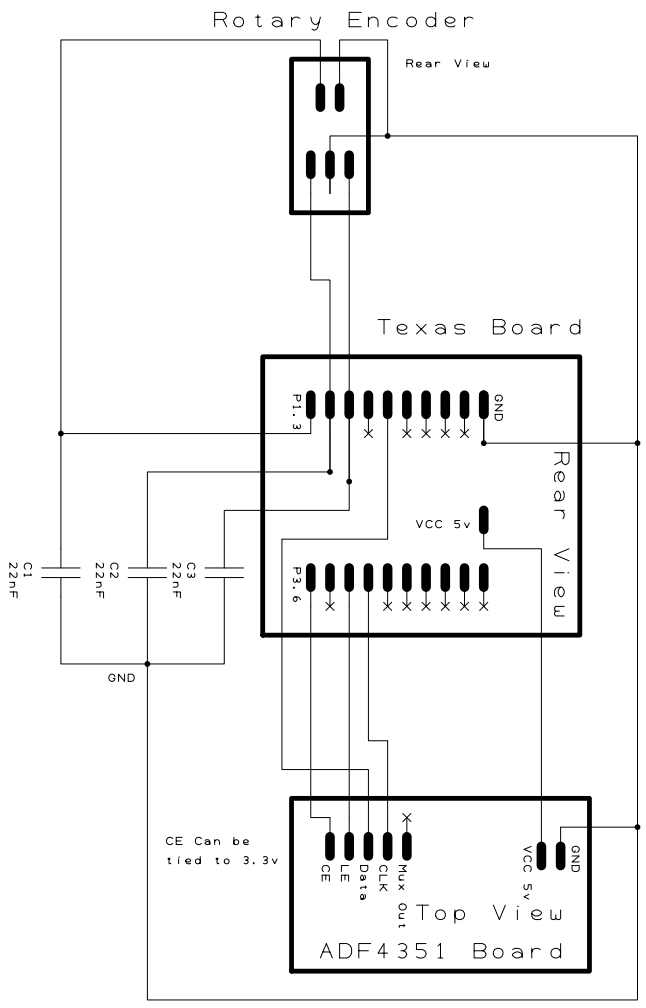
Rotary Encoder
Rear View
Texas Board
P1.3
GND
Rear View
VCC 5v
P3.6
C1
22nF
C2
22nF
C3
22nF
GND
CE Can be
tied to 3.3v
CE
LE
Data
CLK
Mux
Out
VCC 5v
GND
Top View
ADF4351 Board